ST 4G

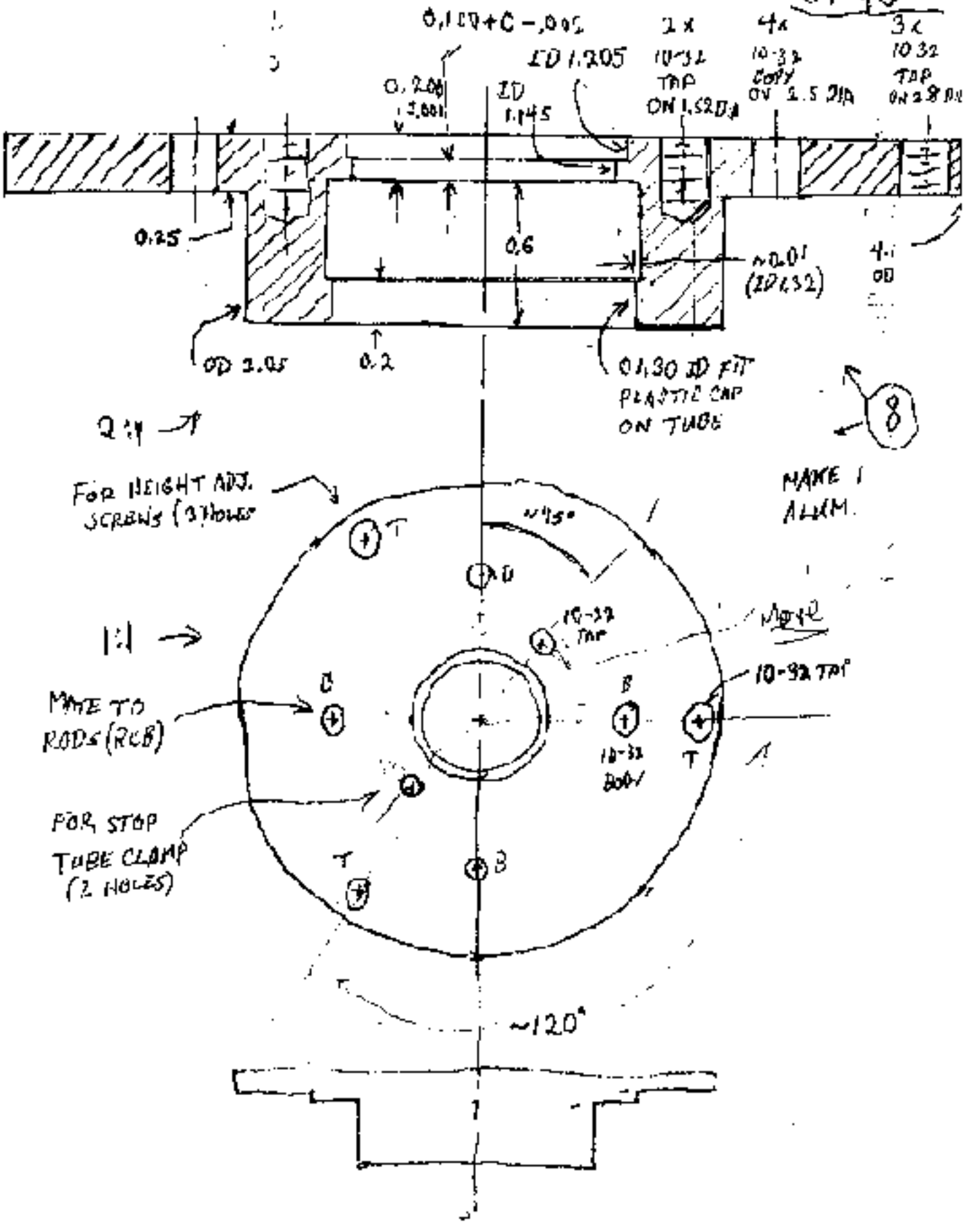
0.100+C -.005
ID 1.205
2x 10-32 TAP ON 1.52 DIA
4x 10-32 COPY ON 2.5 DIA
3x 10-32 TAP ON 2.8 DIA
0.200 ±.001
ID 1.145
0.25
0.6
~0.01 (ID 1.32)
4.1 OD
OD 2.05
0.2
01.30 ID FIT PLASTIC CAP ON TUBE
8
2:1
FOR HEIGHT ADJ. SCREWS (3 HOLES)
MAKE 1 ALUM.
~45°
T
D
10-32 TAP
1:1
MATE
10-32 TAP
C
B
MATE TO RODS (RCB)
10-32 BOLT
T
FOR STOP TUBE CLAMP (2 HOLES)
T
B
~120°